Lab and ProLab Series

MEASUREMENT OF pH, ISE, CONDUCTIVITY AND DISSOLVED OXYGEN – ACCURATE, RELIABLE AND SENSITIVE

cloup

The New Lab and ProLab Series

For all applications the right solution

SI Analytics is proud to present the new Lab and ProLab Series of pH, ISE, conductivity, and dissolved oxygen meters and accessories. The Lab and ProLab series of meters are ideal for any scientist looking to compliment their laboratory with reliable, robust and sensitive measurement readings.

For more information please visit our website **www.si-analytics.com.**

Table of contents

Lab 745/845/945	Page 3
Lab 855/865/955	Page 6
IDS® Sensors	Page 12
Lab 875 and 875P	Page 16
ProLab 2500	Page 18
ProLab 5000	Page 22

Lab 745, Lab 845 and Lab 945

User-friendly design for training and routine measurements.

Its intuitive operation and robust aluminum housing render the Lab x45 product series perfect for training and routine purposes.

Lab 845

Lab 845 Set

Lab 745 DO Meter, Lab 845 pH Meter,

Ordering information

Type No.	Order No.	Description
Lab 745 Set	285206800	Measuring ranges 0.01…20 mg/l DO. Set includes stand, power supply, and DO measuring cell Ox1113T
Lab 845 Set/BL19pH	285206810	Measuring pH, mV, ISE, temp., 2-point-cal., micropr., BNC connection. Set includes stand, power supply, BlueLine 19 pH, and DIN buffers in ampules (6 pieces)
Lab 845 Set/BL25pH	285206820	Measuring pH, mV, ISE, temp., 2-point-cal., micropr., BNC connection. Set includes stand, power supply, BlueLine 25 pH, and DIN buffers in ampules (6 pieces)
Lab 845 Set/BL29pH	285206830	Measuring pH, mV, ISE, temp., 2-point-cal., micropr., BNC connection. Set includes stand, power supply, BlueLine 29 pH, and DIN buffers in ampules (6 pieces)
Lab 945 Set/LF435T	285206840	Measuring ranges 0.000 µS/cm…500 mS/cm, salinity, total dissolved solids (TDS), temperature. Set includes stand, power supply, cond. cell LF435T, and cond. testing solution in ampules (6 pieces)
Lab 945 Set/LF513T	285206850	Measuring ranges 0.000 µS/cm…500 mS/cm, salinity, total dissolved solids (TDS), temperature. Set includes stand, power supply, cond. cell LF513T, and cond. testing solution in ampules (6 pieces)
Lab 945 Set/LF613T	285206860	Measuring ranges 0.000 µS/cm…500 mS/cm, salinity, total dissolved solids (TDS), temperature. Set includes stand, power supply, cond. cell LF613T, and cond. testing solution in ampules (6 pieces)
Z 611	285206380	Connector, stand, and electrode holder for Lab 745/845/945
Z 612	285206390	Universal power supply for Lab 745/845/945
Z 613	285206400	USB cable with data transfer software for Lab 745/845/945
Z 614	285206430	Rubber pads for Lab 745/845/945 (4pcs)
Ox 1113T	285206410	Membrane covered amperometric sensor, plastic shaft, with temperature compensation, 1 m fixed cable with 8-pole plug, length 120 mm, 12 mm Ø, -5...+45 °C
LF 435T	285206420	4 pole cell, plastic shaft, 1.5 m cable with 8 pole plug, sensor material graphite, cell constant 0.33 cm^{-1}, temp.-sensor NTC30kOhm, length 120 mm, 12 mm Ø, -5...+80 °C
Z 615	285206440	Maintenance set for Ox1113T (3 x exchange heads, 10 x electrolytes)
Z 616	285206450	Cable for connecting a RS232 printer to Lab 745/845/945

Technical data:

Lab 745 DO Meter

Measuring range	0 ... 200 %; 0 ... 20 mg/l; temperature: -10 ... 100 °C
Resolution	1 %; 0.01 mg/l; 0.1 °C
Temperatur compensation	Automatic with NTC30kOhm or fixed temperature
Accuracy	±1 digit, ± 0.5 % of the measuring range, T [°C] ± 0.1 (5…50 °C)
Connectors	8-pole sensor socket, 4-pole USB interface socket
Calibration	Direct input
	Temperature offset
	Single-point
	Automatic
Data storage	4.000 Entries with date, time, value 1+2 and temperature

Lab 945 Conductivity Meter

Lab 845 pH Meter

Measuring range	pH: 0 ... 14; - 1,999 ... 1,999 mV;
	Temperature: -10 ... 100 °C
	ISE: 0 ... 30,000 ppm
Resolution	0.01 pH; 1 mV; 0.1 °C
Accuracy	pH: ± 0.01 (± 2 pH around calibration point), U [mV] ± 0.3, T [°C] ± 0.1 (0..100 °C)
Temperature compensation	automatic with Pt1000 or fix temperature
Connectors	BNC, 2 x banana socket (4 mm), 4-pole USB Interface socket
Calibration	Direct input
	Temperature offset
	Two-point
	Automatic (DIN19266, TechDIN19267, Merck, Mettler)
Data storage	4.000 Entries with date, time, value 1+2 and temperature

Lab 945 Conductivity Meter

Measuring range	0 ... 200 µS/cm; 0 ... 2,000 µS/cm; 0 ... 20 mS/cm; 0 ... 500 mS/cm;
	Automatic range
	TDS: 0 ... 200 mg/l; 0 ... 2,000 mg/l; 0 ... 20 g/l; 0 ... 500 g/l
	Salinity: 0 ... 70 (after IOT)
	Temperature: -10 ... 100 °C
Resolution	0.1 µS; 1 µS; 0.01 mS; 0.1 mS; 0.1 °C
Accuracy	±1 digit, ± 0.5 % of the measuring range, T [°C] ± 0.1 (5…50 °C)
Temperature compensation	Automatic with NTC30kOhm or fixed temperature
Connectors	8-pol sensor socket, 4-pole USB interface socket
Calibration	Direct input
	Temperature offset
	Single-Point
	Automatic
Data storage	4.000 Entries with date, time, value 1+2 and temperature

For all:

Display	Graphic LCD Display, 128 x 64 pixel, backlid
Interface	USB, isolated
Ambient temperature	-10 ... 55 °C
Housing protection	Aluminum IP40
Dimensions	145 x 185 x 55 mm (L x W x H)
Weight	Approximatly 1 lb 9 oz (incl. power supply and stand)
EMC	Acc. EN 61326 class B

Lab 855, Lab 865, and Lab 955

Precise. Reliable. Selective.

The Lab 855, Lab 865, and Lab 955 unite the most modern measuring technology available along with new functionality such as AutoRead and CMC (measuring range monitoring) wich makes lab measurements even more reliable.

The newly designed, clearly structured keyboards are adapted to operators' logic with tactile feedback as well as large, easy-to-read displays wich are used to support and enhance the interface between the meter and the user.

pH Cond

Precise measurements …

… with Lab 855 and Lab 955

pH

Reliable documentation …

… with Lab 865

Precise measurements...

... with Lab 855 and Lab 955.

Modern meters for everybody who wants to simply measure accurately.

The Lab 855 for pH and Lab 955 for conductivity measurements are perfectly suited benchtop meters for measurements in laboratories in the chemical and pharmaceutical industries as well as in medical labs.

Precise measurements
Users achieve reproducible measured results due to the active automatic AutoRead function with independent detection of stable measuring values. An adjustable calibration timer assists in an increased improvement of the accuracy.

Easy to operate
The user-friendly keyboard with large, easy to read LCD display, deliver all relevant information at a glance.

Type No.	Order No.	Description
Lab 855 Set	285206700	Simple, easy-to-use pH/mV benchtop meter (DIN) with universal power supply, stand and operating instructions, pH electrode BlueLine 14 pH, buffer 4.00/7.00/10.01, 3 mol/l electrolite solution.
Lab 955 Set	285206760	Simple, easy-to-use conductivity benchtop meter. Set includes conductivity measuring cell, device with universal power supply, stand, 4-pole graphite cell LF413T, and 0.01 mol/l KCl conductivity standard.

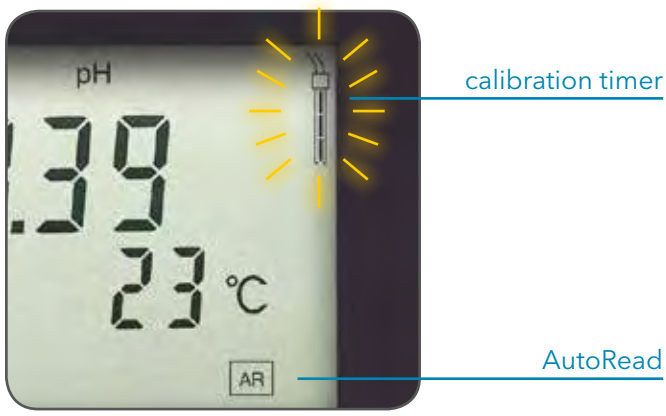

- Reproducible measuring results with active AutoRead function
- Simple calbration with adjustable calibration timer
- Intuitive operation with clearly arranged keyboard

Benefits
Lab 855 / Lab 955

Also available as application-oriented sets with sensors, including power supply and stand.

Reliable documentation...

... with Lab 865

Lab 865

- USB interface for rapid data transfer

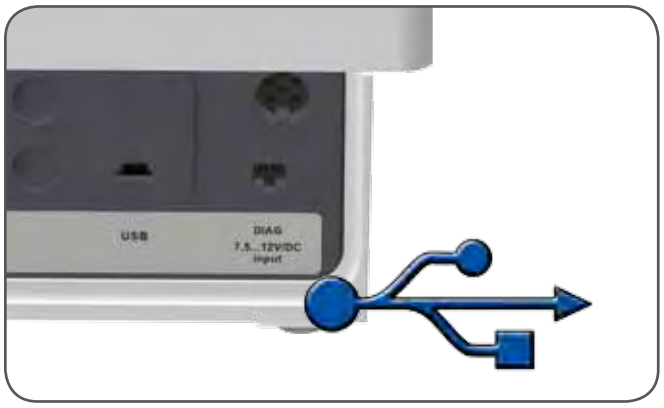

Data output in *.csv format

Precise measurements with documentation

The Lab 865 is perfect for pH measurements in quality assurance labs requiring the documentation for GLP. Built on the Lab 855 platform, the Lab 865 offers additional convenient functionality:

- **Data transfer via USB interface**
- **Manual or timer controlled data logging of measured values .**
- **Protocols include date, time, and ID and sensors serial numbers for GLP compliance.**
- **Data is transferred in * .csv format.**
- **Excel Add-in included for the formatted output of all data and calibration protocols.**

Also available as an application-oriented set with sensor, power supply and stand.

Type No.	Order No.	Description
Lab 865 Set	285206710	Measuring parameters pH, mV, temp., 5-point-cal., micropr., Mini USB-B, data storage, DIN 19262 connect. Including stand, power supply, pH-temp. comb. electrode BlueLine 14 pH, calibr. solutions.

CMC function

- Easy to use

  Graphic display with text menu for easy handling.

- pH measurement on sight

  Optimize measuring results: With the new CMC function to monitor the congruency of measuring and calibration range for pH.

Benefits Lab 865

Lab 855, Lab 865, and Lab 955

Connectivity

Lab 855

Lab 865

Lab 955

Technical data

Model	Lab 855	Lab 865	Lab 955
Temperature compensation	Automatic/manual	Automatic/manual	Automatic, can be switched off
Calibration points	1 to 3	1 to 5 pH, 2-7 ISE	1
Calibration records	1	10	1
Calibration timer	■	■	■
Memory entries		500/5000*	
Interface		Mini USB-B	
GLP/AQS supporting		■	
Display	LCD	Graphic b/w, backlit	LCD
Electrode connection	DIN	DIN	8-pin
Additional		CMC, input of sensor serial number	
Power supply	Battery or universal power supply	Battery or universal power supply	Battery or universal power supply
pH	– 2.0 … 20.0 ± 0.1 pH – 2.00 … 20.00 ± 0.01 pH – 2.000 … 19.999 ± 0.005 pH	– 2.0 … 20.0 ± 0.1 pH – 2.00 … 20.00 ± 0.01 pH – 2.000 … 19.999 ± 0.005 pH	
mV	± 1200.0 ± 0.3 mV ± (2000 ± 1) mV	± 1200.0 ± 0.3 mV ± (2500 ± 1) mV	
Temperature	– 5.0 … 105.0 °C ± 0.1 °C	– 5.0 … 105.0 °C ± 0.1 °C	
CMC		■	
Conductivity			0.00 … 1000 mS/cm ± 0.5 % of meas. val. 0.000 … 1.999 µS/cm, K = 0.01 cm^{-1} 0.000 … 1.999 µS/cm, K = 0.01 cm^{-1} 0.00 … 19,99 µS/cm, K = 0.1 cm^{-1}
Specific resistance			0.00 … 199.9 MΩcm
Cell constants fix			0.01 cm^{-1}
with calibration			0.450 … 0.500 cm^{-1} 0.800 … 0.880 cm^{-1}
adjustable			0.090 … 0.110 cm^{-1} 0.250… 2.500 cm^{-1}
Salinity			0.0 … 70.0 (nach IOT)
TDS			1 … 1999 mg/l
Temperature			-5.0 … 105.0 °C ± 0.1 °C
T_{ref}			20 °C/25 °C
Temperature compensation			none, nlF, 0.000 … 3.000 %/K

all measured values ± 1 decimal place

* manual/automatic

IDS®

New features

SI Anayltics' IDS®: Intelligent, Digital Sensors technology for the standard parameters pH, conductivity and dissolved oxygen consists of two components, Digital sensors and matching field or benchtop meters. This new processing of the measured values no longer takes place in the device, exclusively in the sensor so that every sensor has it's own data base when connected.

Built on the basic sensor of the BlueLine and ScienceLine series that have proven themselves tens of thousands of times over, the IDS® sensors have added precision and reliability and cover almost any application.

I intelligent:

IDS® sensors are intelligent. They log into the device automatically, submit their name, serial number, calibration status and history as well as all parameters.

D digital:

IDS® sensors transform the sensitive measuring signals in the sensor head into digital signals and transmit them to the output device without interference and errors.

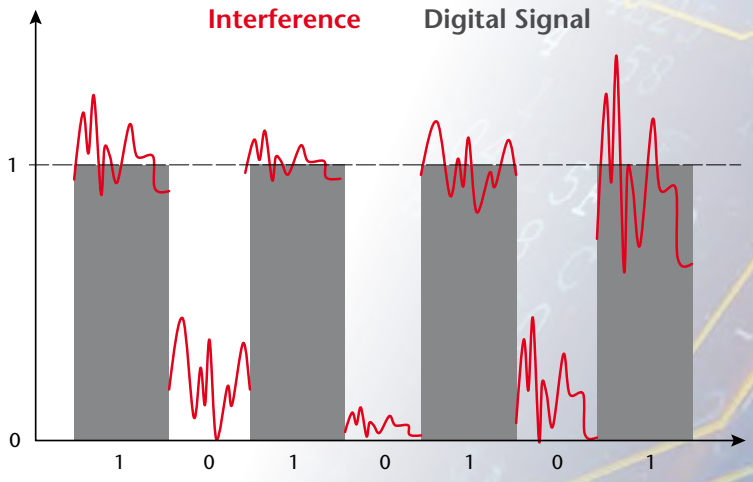

S sensor:

IDS® sensors are based on proven and continuously developed sensors by SI Analytics. They cover almost any lab application, like pH, conductivity or dissolved oxygen measurements.

SI Analytics
also offers
Field meters with IDS®:
HandyLab 680

SI Analytics also offers titrators with IDS®:
TitroLine® 7800
Cond
O2
pH
O2
pH
Cond
4.006
25.0 °C
134.5 µS/cm
25.0 °C
ProLab 2500

IDS®-Sensors

Unique.

IDS® combines proven measuring technology with new advantages. Based on established electrochemical SI Analytics sensors, but equipped with state-of-the-art measuring electronics IDS® save the serial number and calibration data in the sensor, error-free and ready to use immediately. However, IDS® do not only store data, but they also process measuring signals directly and thus improve the data quality. This also allows a current evaluation of the sensor quality by means of the QSC (Quality Sensor Control) function.

IDS® combine proven technology with new advantages.

- High-quality, highly developed sensor technology combined with state-of-the-art measuring electronics.
- IDS® have saved the serial number and calibration history – error-free and therefore immediately ready for use.
- Current evaluation of the sensor quality for IDS® pH electrodes thanks to QSC (Quality Sensor Control).
- IDS® conductivity measurement: Two sensors to cover all applications.

SI Analytics IDS®

IDS® types

Type	Measuring function	Application range
A 157 IDS	pH micro cylinder + temp.	-5..100 °C pH 0-14
A 161/162 IDS	pH sphere + temp.	-5..100 °C pH 0-14
A 6880 IDS	pH spear + temp.	-5..100 °C pH 0-14
A 7780 IDS	pH sphere + temp.	-5..80 °C pH 0-14
BL 14 pH IDS	pH cone + temp.	-5..100 °C pH 0-14
BL 21 pH IDS	pH spear	-5..80 °C pH 2-13
BL 24/24-3 pH IDS	pH cylinder	-5..80 °C pH 0-14
BL 27 pH IDS	pH flat	-5..50 °C pH 2-13
BL 31 RX IDS	ORP platinum disk, 4 mm Ø + temp.	-5..100 °C
BL 32/32-3 RX IDS	ORP platinum pin, 1 mm Ø + temp.	-5..80 °C
FDO 1100/1100 3M IDS	Oxygen optical (photoluminiscence) + temp.	0.. 50 °C 0 ... 20 mg/l O_2
IL-Micro-pHT-IDS	pH micro cylinder + temp.	-5..100 °C pH 0..14
IL-pHT-A120/ 170 MF-IDS	pH sphere + temp.	-5..100 °C pH 0..14
IL-Sp-pHT-IDS	pH spear + temp.	-5..100 °C pH 0..14
LF313T IDS	Conductivity stainless steel + temp.	-5..100 °C 0,01..200 µS/cm
LF 413T/413T 3M IDS	Conductivity graphite + temp.	-5..80 °C 1 µS/cm..2000 mS/cm

INTELLIGENT DIGITAL SENSORS

- Higher accuracy than traditional analog sensors
- Perfect galvanized separation
- Resistant against environmental influences
- QSC takes the guess work out of the determining the health of your sensor
- Effortlesscapture and storage of your sensors latest calibration data
- Highest possible operator comfort and measuring precision

Benefits IDS® Electrodes

Lab 875 and Lab 875P

Safe determination of pH, ORP, conductivity & optical DO...
... with the innovative Lab 875 and Lab 875P.

The Lab 875 with a digital measuring channel is optimal in the world of digital multi-parameter measurement using IDS®. The IDS® technology allows optimized measurements and efficient documentation in the simplest manner.

- One-channel multi-parameter meter for all IDS® sensors
- Digital sensor recognition
- Optionally installed printer: Lab 875P

Lab 875

Lab 875P

Documentation as per GLP/AQS

- Automatic, digital capture of all IDS® sensor data for traceability of measured values.
- User administration capabilities for the safe allocation of user and measuring results.
- Transmission of all data in *.csv format via USB interface to PC; if desired, formatted transfer to Excel (MultiLab® Importer, included in the delivery and as a download).
- Output directly into an optional integrated printer.

Benefits
Lab 875 and Lab 875P

ProLab 2500

If there is the need for a little more...

The ProLab 2500 is a digital high-performance meter with three channels. With its color graphic display protected by glass, high-quality zinc die-casting base as well as the anti-bacterial keyboard cover, it meets even the highest demands.

- Three universal measuring channels
- Digital sensor recognition
- Antibacterial keyboard
- Any configuration of pH, ORP, conductivity and Optical DO

ProLab 2500

Flexible performance

- Measures pH, ORP, ISE, dissolved oxygen, and conductivity.
- Any combination of the same or different parameters.
- Color backlit graphic display with CMC, QSC and channel display.
- An adapter for conventional pH electrodes (DIN plug) included in the delivery.
- Memory with 10,000 possible entries.

Measuring certainty

- The digital signal transfer eliminates interference, safely allocates calibration data, automatically transmits sensor data.
- The Quality Sensor Control (QSC) icon provides precise information about the actual state of the electrode and therefore increases the operational safety.

Documentation

- Automatic, digital capture of all sensor data for retraceability of measured values.
- Available user administration for the safe allocation of user and measuring results or sample and measuring results.
- Data output to PC, USB memory stick or selected printers.

Digital sensor recognition

Lab 875 (P) and ProLab 2500

Technical data

Model	Lab 875 (P)	ProLab 2500
Parameter	pH, mV, saturation, concentration, partial pressure, conductivity, spec. resistance, salinity, TDS, temperature	
IDS® - Intelligent Digital Sensors	■	■
Universal measuring channels	1	3
Analog pH/ORP sensors	Z600 IDS® analog adapter (optional)	Z600 IDS® analog adapter (included in delivery)
Temperature compensation	all except for ORP	all except for ORP
Calibration points pH	1–5	1–5
ISE	-	2–7 (requires adapter)
Dissolved oxygen	1	1
Conductivity	1	1
Calibration records	Max. 10	Max. 10
Calibration timer	1 – 999 days	1 – 999 days
Memory entries	manual: 500 data sets automatic: 4,500 data sets	manual: 500 data sets automatic: 10,000 data sets
Logger	■	■
Interface	Mini USB-B	USB-A, Mini USB-B
GLP/AQS supporting	■	■
Display	Graphic, BW	Color graphic
Printer option	Yes: Lab 875P	external
Additional	CMC, QSC	antibacterial keypad, QSC, CMC, replaceable firmware
Power supply	Universal power supply, battery (4 x 1.5 V AA Type)	Universal power supply

Lab 875P

ProLab 2500

Ordering information

Type No.	Order No.	Desciption
Lab 875	285206320	One channel instrument for IDS® sensors in order to measure pH, mV, Cond., DO and Temp., Mini USB-B interface, Data storage. Including stand and power supply.
Lab 875 pH Set	285206720	One channel instrument for IDS® sensors in order to measure pH, mV, Cond., DO and Temp., Mini USB-B interface, Data storage. Including stand, power supply, BlueLine 14 pH IDS® and buffer solutions.
Lab 875 Cond Set	285206730	One channel instrument for IDS® sensors in order to measure pH, mV, Cond., DO and Temp., Mini USB-B interface, Data storage. Including stand, power supply, LF 413T IDS® and cond. testing solutions.
Lab 875P	285206330	One channel instrument with integrated printer for IDS® sensors in order to measure pH, mV, Cond., DO and Temp., Mini USB-B interface, Data storage. Including stand and power supply.
Lab 875P pH Set	285206740	One channel instrument with integrated printer for IDS® sensors in order to measure pH, mV, Cond., DO and Temp., Mini USB-B interface, Data storage. Including stand, power supply, BlueLine 14 pH IDS® and buffer solutions.
Lab 875P Cond Set	285206750	One channel instrument with integrated printer for IDS® sensors in order to measure pH, mV, Cond., DO and Temp., Mini USB-B interface, Data storage. Including stand, power supply, LF 413T IDS® and cond. testing solutions.
ProLab 2500	285206350	Three channel instrument for IDS® sensors in order to measure pH, mV, Cond., DO and Temp., USB-A and Mini USB-B interface, Data storage. Including stand, power supply and IDS® analog adapter.
ProLab 2500 pH Set	285206770	Three channel instrument for IDS® sensors in order to measure pH, mV, Cond., DO and Temp., USB-A and Mini USB-B interface, Data storage. Including stand, power supply, A 162 IDS®, buffer solutions and IDS® analog adapter.
ProLab 2500 pH/Cond Set	285206780	Three channel instrument for IDS® sensors in order to measure pH, mV, Cond., DO and Temp., USB-A and Mini USB-B interface, Data storage. Including stand, power supply, A 162 IDS®, LF 413T IDS®, testing solutions and IDS® analog adapter.
ProLab 2500 pH/Cond/ Ox Set	285206790	Three channel instrument for IDS® sensors in order to measure pH, mV, Cond., DO and Temp., USB-A and Mini USB-B interface, Data storage. Including stand, power supply, A 162 IDS®, LF 413T IDS®, FDO 1100 IDS®, testing solutions and IDS® analog adapter.
Z 600	285206360	Adapter IDS socket / DIN plug for connecting analog DIN electrodes to an IDS® socket.
Z 610	285206370	Printer paper, document quality, one roll for Lab 875P.
Z 850	285204889	Universal power supply unit, 230 and 120 V for all Lab and ProLab meters.
Z 865	285201520	Stand set S4D, including arm and electrode holder for docking to the meters of the Lab- and ProLab family as well as for autonomous usage.
Z 866	285204940	Flexible electrode arm for fixed attachement to Lab & ProLab meter family.
Z 875	285201540	USB cable for Lab and ProLab meters.

ProLab 5000

Complete system for measurement, control, and regulation of pH, conductivity, and dissolved oxygen in laboratories and technical centers.

- Measurement of pH/ISE/mV, conductivity, and dissolved oxygen
- Up to 4 measurement modules (inputs) in a variety of configurations
- 5.7" RGB TFT display with touch control
- PC software with extensive operating functions
- Coupling of auto-sampler and burettes for dosing and automated measurements
- Special electrodes for pH
- Current outputs for each parameter
- Additional modules for current output available
- Timer function
- Alarm/threshold function
- 2 PID regulators
- Virtual channels to calculate different parameters from the measured value

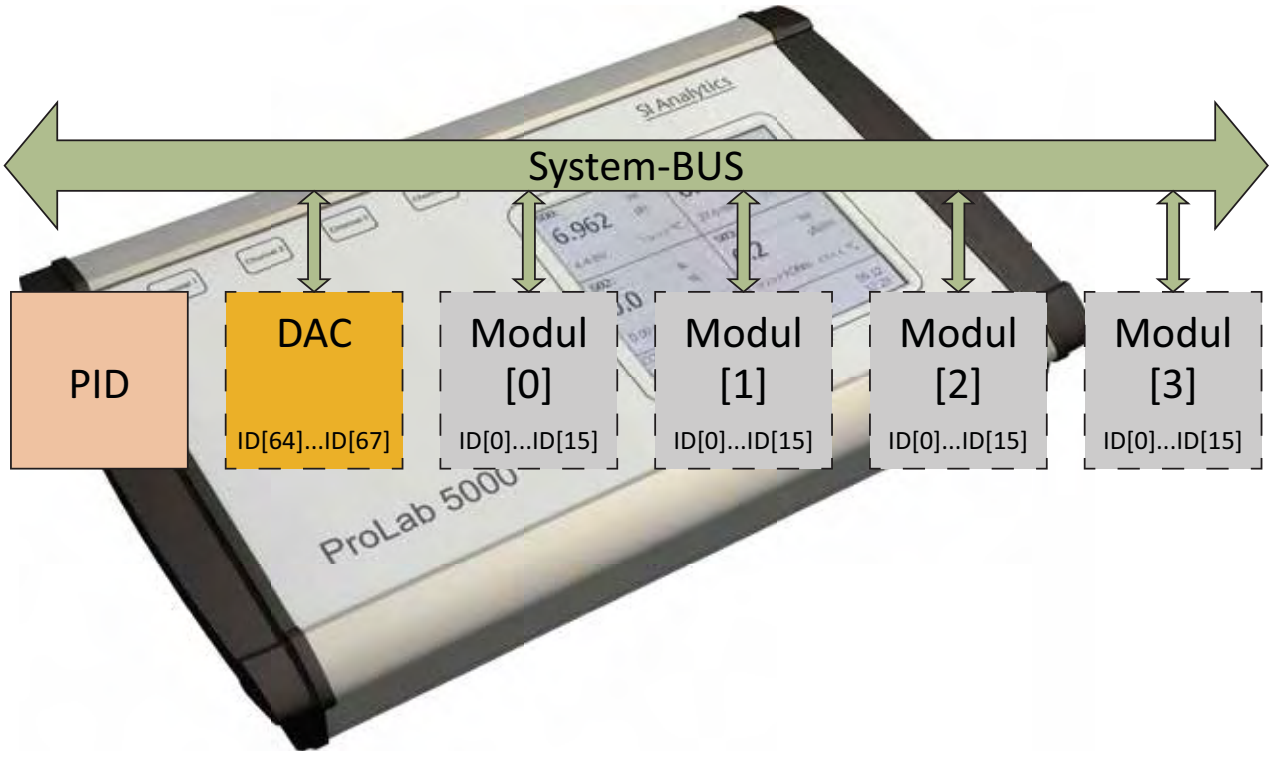

- Data storage and recording
- Data transfer with RS232/USB or ethernet
- Logbook (i.e. documentation of setting changes)
- Password protection

ProLab 5000

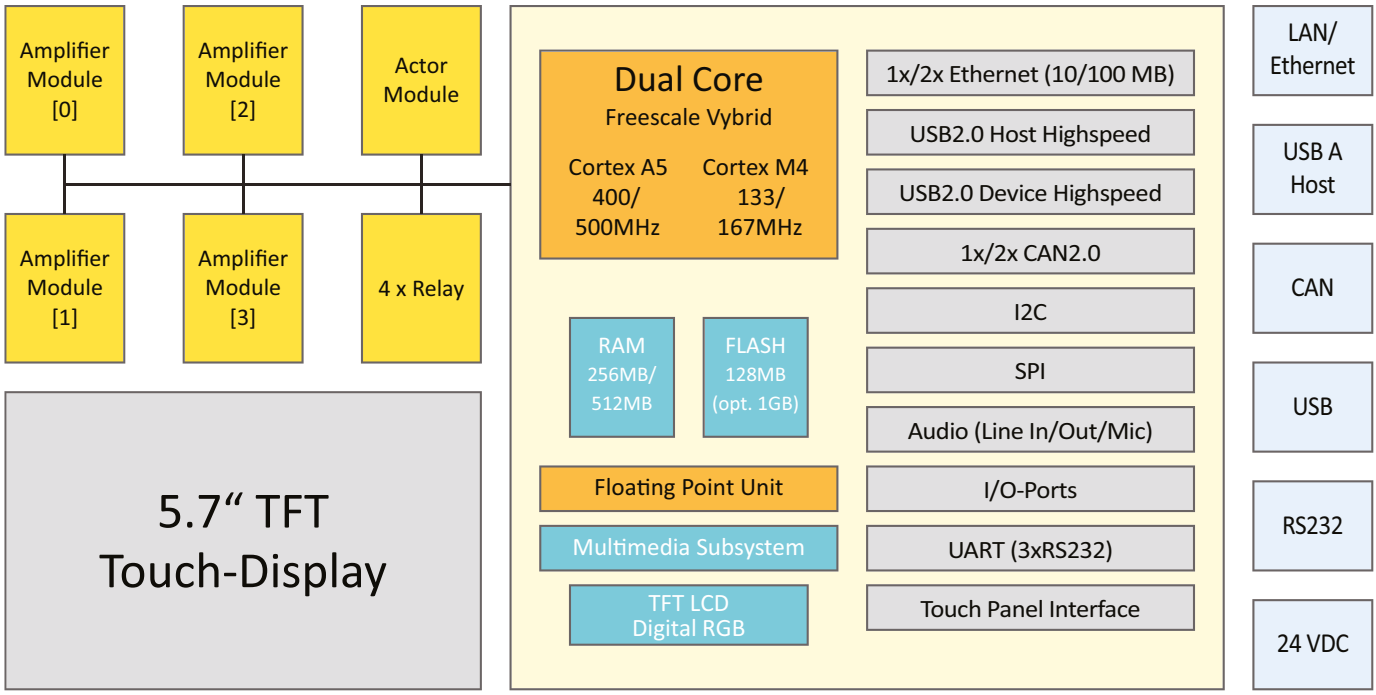

Components of the ProLab 5000

The ProLab 5000 multiparameter measuring instrument is based on a modular system structure that links the measurement modules to the central unit and to each other via a bus connection. It is the complete solution for measurement, control, and regulation in laboratory and technical centers. Choose up to four measurement modules can determine any combination of pH, conductivity, dissolved oxygen, ORP/ redox potential, temperature and other parameters.

The main components of the multiparameter laboratory measurement system ProLab 5000 are:

- ProLab 5000 with power supply, touch screen display, internal modules, data logger and logbook, various digital interfaces such as RS232, USB and ethernet
- PC visualization program
- Measurement modules
- Sensors
- Optional samplers, depending on type, up to 72 samples (i.e. TW Alpha plus)
- Optional dosing system (TITRONIC® 500)
- Optional stirrer

Setting options

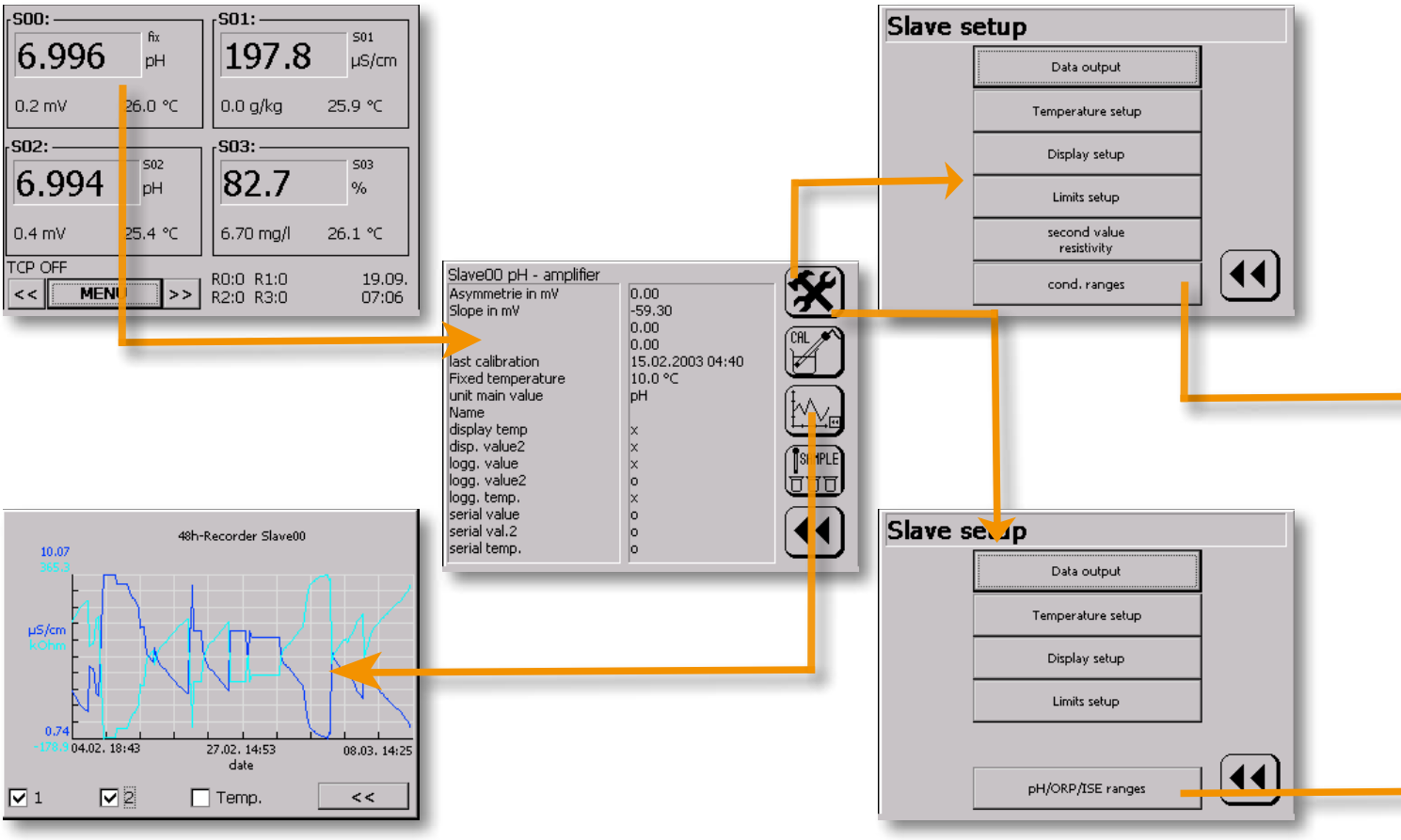

Multiparameter laboratory measuring instrument ProLab 5000

Color graphical touchscreen display

The distinguishing outward feature of the ProLab 5000 is the color touchscreen graphical display, which significantly simplifies operation, configuration, and calibration. Up to four measured values with their units, temperature values, a possible second value as well as an individual name can be presented simultaneously on a display page.

Four integrated threshold relays

Four integrated threshold relays for simple control, regulation, or alarm tasks are standard. Two PID-regulators that work independently of each other are available for complex regulation tasks. The regulators can be assigned to any parameter and function as analog, pulse width or pulse frequency regulators using the analog current outputs and the relay outputs of the measuring instrument.

ProLab 5000 Pilot visualization program

All values can be cyclically output and displayed graphically via the USB interface or ethernet connected to the PC visualization program ProLab 5000 Pilot. The visualization program ProLab 5000 Pilot simultaneously contains all functions for reading the data logger. The data logger can be used via the USB interface and the data can be transferred directly to a USB without the program ProLab 5000 Pilot.

Data recorder

The data recorder graphically displays the measured value curve of the parameters of each measurement module over the past 48 hours on the touch screen. This representation gives the operator a quick overview of the measurement progress, indicating the average, maximum, and minimum readings.

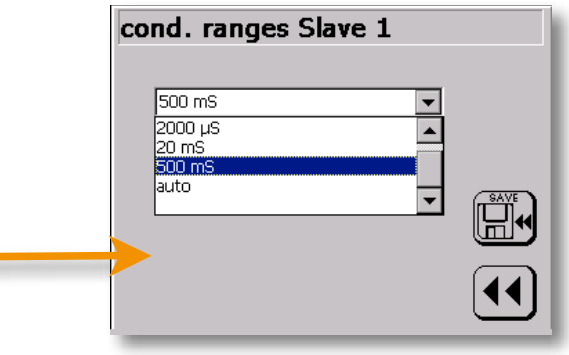

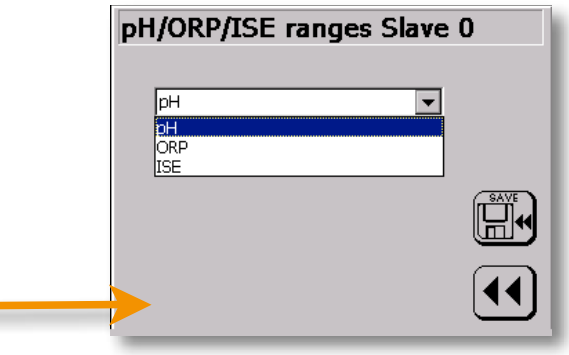

ProLab 5000

Ordering information

Type No.	Order No.	Product hierarchy No.	Description
PL5000 0D 1pH 0LF 0OX	285206010	07	Multiparameter measuring instrument ProLab 5000 with one pH/mV/ISE module
PL5000 0D 1pH 1LF 0OX	285206020	07	Multiparameter measuring instrument ProLab 5000 with one each pH/mV/ISE and conductivity module
PL5000 0D 1pH 1LF 1OX	285206030	07	Multiparameter measuring instrument ProLab 5000 with one each pH/mV/ISE, conductivity and dissolved oxygen module
PL5000 0D 1pH 2LF 1OX	285206040	07	Multiparameter measuring instrument ProLab 5000 with one each pH/mV/ISE and dissolved oxygen as well as two conductivity modules
PL5000 0D 2pH 0LF 0OX	285206050	07	Multiparameter measuring instrument ProLab 5000 with two pH/mV/ISE modules
PL5000 0D 2pH 1LF 0OX	285206060	07	Multiparameter measuring instrument ProLab 5000 with two pH/mV/ISE and one conductivity modules
PL5000 0D 2pH 2LF 0OX	285206070	07	Multiparameter measuring instrument ProLab 5000 with each two pH/mV/ISE and conductivity modules
PL5000 0D 2pH 1LF 1OX	285206080	07	Multiparameter measuring instrument ProLab 5000 with one each conductivity, dissolved oxygen and two pH/mV/ISE modules
PL5000 0D 3pH 0LF 0OX	285206090	07	Multiparameter measuring instrument ProLab 5000 with three pH/mV/ISE modules
PL5000 0D 3pH 1LF 0OX	285206100	07	Multiparameter measuring instrument ProLab 5000 with three pH/mV/ISE and one conductivity modules
PL5000 0D 3pH 0LF 1OX	285206110	07	Multiparameter measuring instrument ProLab 5000 with three pH/mV/ISE and one dissolved oxygen modules
PL5000 0D 4pH 0LF 0OX	285206120	07	Multiparameter measuring instrument ProLab 5000 with four pH/mV/ISE modules
PL5000 1D 1pH 0LF 0OX	285206130	07	Multiparameter measuring instrument ProLab 5000 with digital-analog converter and one pH/mV/ISE module
PL5000 1D 1pH 1LF 0OX	285206140	07	Multiparameter measuring instrument ProLab 5000 with digital-analog converter as well as one each pH/mV/ISE and conductivity module
PL5000 1D 1pH 1LF 1OX	285206150	07	Multiparameter measuring instrument ProLab 5000 with digital-analog converter as well as one each pH/mV/ISE, conductivity and dissolved oxygen module
PL5000 1D 1pH 2LF 1OX	285206160	07	Multiparameter measuring instrument ProLab 5000 with digital-analog converter as well as one each pH/mV/ISE, dissolved oxygen and two conductivity modules
PL5000 1D 2pH 0LF 0OX	285206170	07	Multiparameter measuring instrument ProLab 5000 with digital-analog-converter and two pH/mV/ISE-modules
PL5000 1D 2pH 1LF 0OX	285206180	07	Multiparameter measuring instrument ProLab 5000 with digital-analog-converter, two pH/mV/ISE- and one conductivity-modules
PL5000 1D 2pH 2LF 0OX	285206190	07	Multiparameter measuring instrument ProLab 5000 with digital-analog-converter, each two pH/mV/ISE- and conductivity-modules
PL5000 1D 2pH 1LF 1OX	285206200	07	Multiparameter measuring instrument ProLab 5000 with digital-analog converter, one each conductivity and dissolved oxygen as well as two pH/mV/ISE modules
PL5000 1D 3pH 0LF 0OX	285206210	07	Multiparameter measuring instrument ProLab 5000 with digital-analog converter and three pH/mV/ISE modules
PL5000 1D 3pH 1LF 0OX	285206220	07	Multiparameter measuring instrument ProLab 5000 with digital-analog converter, three pH/mV/ISE and one conductivity modules
PL5000 1D 3pH 0LF 1OX	285206230	07	Multiparameter measuring instrument ProLab 5000 with digital-analog converter, three pH/mV/ISE and one dissolved oxygen modules
PL5000 1D 4pH 0LF 0OX	285206240	07	Multiparameter measuring instrument ProLab 5000 with digital-analog converter and four pH/mV/ISE modules
Z570	285206250	04	USB cable for ProLab 5000
Z573	285206260	04	Cable for connecting the ProLab 5000 to sample changer
Z575	285206270	04	Wall mount for ProLab 5000

Number of modules			
pH/mV/ISE	Cond.	DO	Digital-analog converter
1	0	0	0
1	1	0	0
1	1	1	0
1	2	1	0
2	0	0	0
2	1	0	0
2	2	0	0
2	1	1	0
3	0	0	0
3	1	0	0
3	0	1	0
4	0	0	0
1	0	0	1
1	1	0	1
1	1	1	1
1	2	1	1
2	0	0	1
2	1	0	1
2	2	0	1
2	1	1	1
3	0	0	1
3	1	0	1
3	0	1	1
4	0	0	1

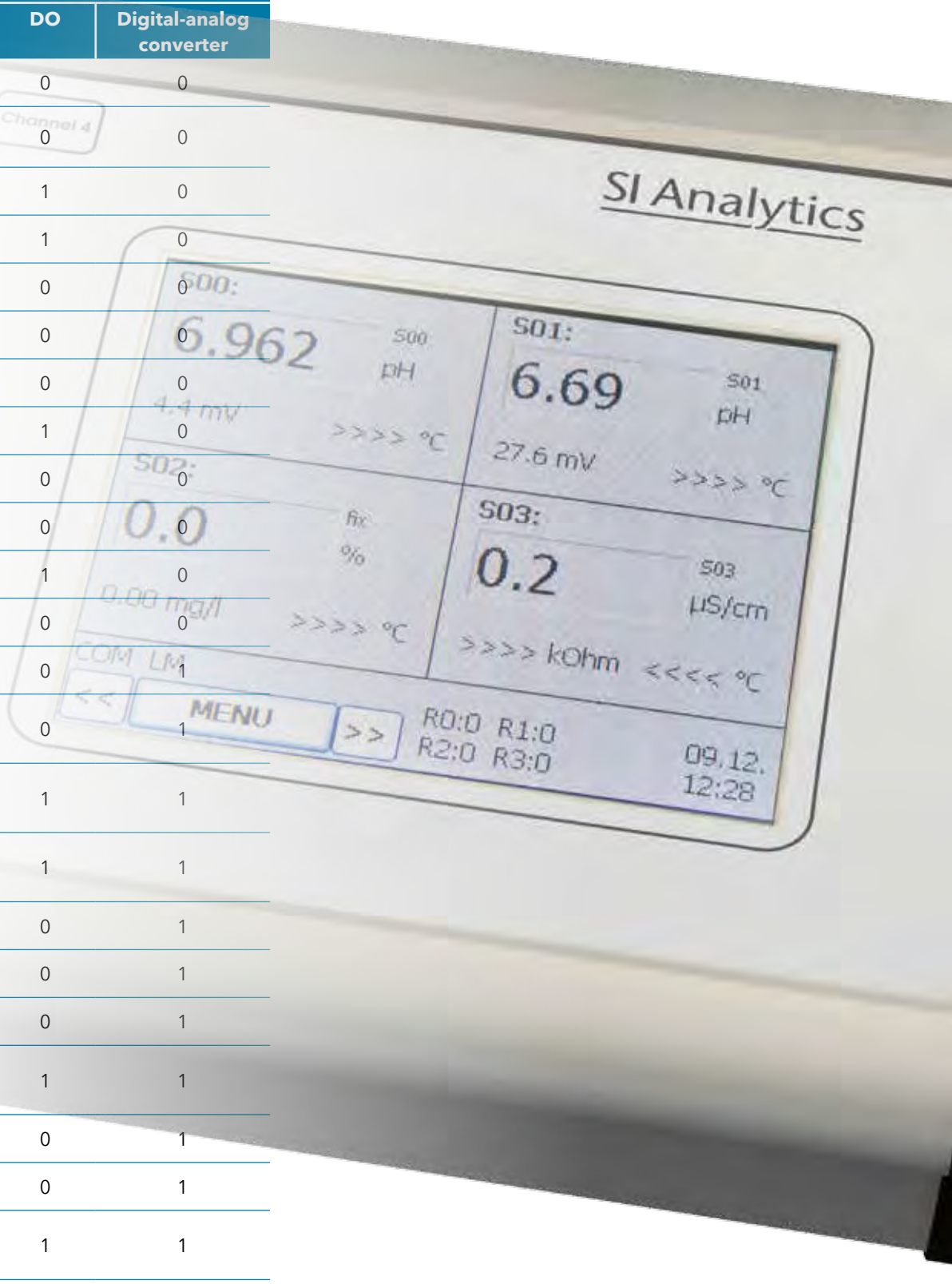

Technical specifications

Auxiliary energy	24 V DC desktop power supply, voltage disconnect via the unit switch
Ambient temperature	0 ... + 40 °C
Display	Touch screen graphic display 320 x 240 pixel, 256-color, back lit
Menu languages	German, English
Data transmission	Serial interface RS-232, ethernet port, USB port for PC Connection
Control outputs	4 potential-free relay outputs; resistive load I ≤ 1 A, U ≤ 24 V DC for threshold or alarm function; including a relay with timer function (wash contact; adjustable time interval 1 ... 9,999 hours)
Data storage	Integrated data logger for approx. 100,000 values including date and time, 48 hour data recorder
Logbook	Approx. 200 activities including date and time
Housing	Aluminum housing IP 40/DIN EN 60529; Dimensions see dimensional drawings, wall-mount kit available
Connections	BNC, banana, 8-pin Din, BK, USB, ethernet
Electromagnetic compatibility	89/336/EEC, EN 61326 Class B
Measurement modules	Four internal measurement modules; in any combination; inputs galvanically separated; calibration data storage; sensor monitoring via adjustable threshold bands; manual and automatic temperature compensation
Regulator module	Optional regulator module PL5000DAC: Standard signal module 4 x 0(4) ... 20 mA
Safety	Protection class III, EC Directive 73/23 EN 61010-1: 2001
GLP	GLP functions (data recording)

ProLab 5000 - dimensions:

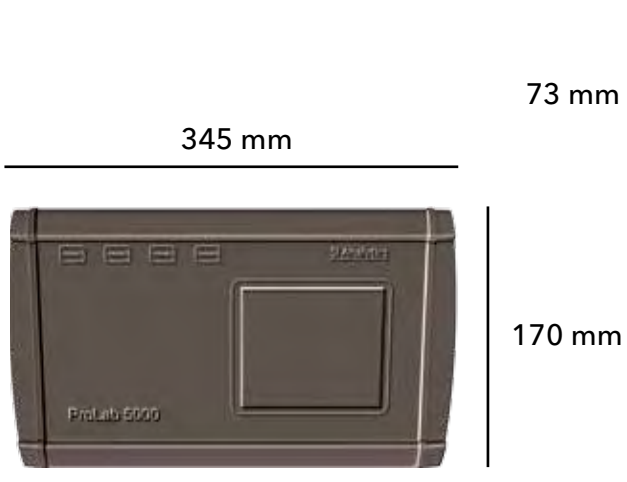

Multifunctional connections:

Back panel connections

Lateral connections

Measurement modules:

Internal modules	Main parameter measuring range/resolution	Secondary parameters/ resolution	Temperature measurement measuring range/ resolution	Electrodes/sensors
PL5000 pH; ORP, ISE	pH value pH 0 ... 14 / 0.001 pH Accuracy: 0.005 pH	Chain voltage 0.1 mV	-10…130 °C / 0.1 °C	pH single rod measuring cell, separated measuring chain, Pt 1000 temperature sensor
	Redox potential -2000… +2000 mV > 0.1 mV	Redox voltage relative to the standard hydrogen electrode 0.1 mV	-10…130 °C / 0.1 °C	Redox single rod measuring cell, separate measuring chain, Pt 1000 temperature sensor
	Ion concentration corr. sensor specification (ISE) and calibration	Chain voltage 0.1 mV	-10…130 °C / 0.1 °C	Ion-selective electrode (ISE), separate measuring chain, Pt 1000 temperature sensor
PL5000LF	Conductivity 0…200 µS/cm 0.1 µS/cm (4-pol) 0…2 mS/cm 1 µS/cm 0…20 mS/cm 0.01 mS/cm 0…500 mS/cm 0.1 mS/cm automatic switching	Salinity 2 ... 42 g/kg	-10…130 °C / 0.1 °C	4-electrode conductivity measurement cell, NTC30kOhm temperature sensor
PL5000OX	O_2 saturation 0…120% / 0.1%	O_2 concentration 0…20 mg/l / 0.1	-10…130 °C / 0.1 °C	Membrane-covered amperometric O_2 sensor, NTC30kOhm temperature sensor

presented by

cloup

42 à 48 bd de Polangis - BP 260
94502 Champigny-sur-Marne - Cedex
☎ 01 48 83 21 76 - 🖷 01 48 83 51 01
info@cloup.fr www.cloup.fr

CO_2 NEUTRAL
DE160220814X01